QM A1

The operator $\hat{R}$ is defined by $\hat{R}\psi(x) = \mathrm{Re}[\psi(x)]$ (it returns the real part of $\psi(x)$).
Is $\hat{R}$ a linear operator? Explain.

<u>SOLUTION</u>

$\hat{R}$ is not linear. It's easy to find a counterexample against the hypothesis of linearity:
Investigate the function f, for which $f(x) = i$ (it always returns i, no matter what x is). Now

$$\hat{R}\big(f(x)\big) = \mathrm{Re}[f(x)] = \mathrm{Re}[i] = 0$$

but

$$\hat{R}\big(i\,f(x)\big) = \mathrm{Re}[i\,f(x)] = \mathrm{Re}[-1] = -1 \quad \boxed{\neq} \quad i\hat{R}f(x) = 0$$

QM A2

Find the energy levels of a spin $s=\frac{3}{2}$ particle whose Hamiltonian is given by

$\hat{H}=\frac{\alpha}{\hbar^2}\left(\hat{S}_x^{\,2}+\hat{S}_y^{\,2}-2\hat{S}_z^{\,2}\right)-\frac{\beta}{\hbar}\hat{S}_z$, where α and β are constants.

<u>SOLUTION</u>

We rewrite the Hamiltonian:

$$\hat{H}=\frac{\alpha}{\hbar^2}\left(\left\{\hat{S}_x^{\,2}+\hat{S}_y^{\,2}\right\}-2\hat{S}_z^{\,2}\right)-\frac{\beta}{\hbar}\hat{S}_z=\frac{\alpha}{\hbar^2}\left(\left\{\hat{S}^2-\hat{S}_z^{\,2}\right\}-2\hat{S}_z^{\,2}\right)-\frac{\beta}{\hbar}\hat{S}_z=\boxed{\frac{\alpha}{\hbar^2}\left(\hat{S}^2-3\hat{S}_z^{\,2}\right)-\frac{\beta}{\hbar}\hat{S}_z}$$

We see that the Hamiltonian is diagonal in the $|s,m_s\rangle$ basis:

$$\hat{H}|s,m_s\rangle=\left\{\frac{\alpha}{\hbar^2}\left(\hat{S}^2-3\hat{S}_z^{\,2}\right)-\frac{\beta}{\hbar}\hat{S}_z\right\}|s,m_s\rangle=\left\{\frac{\alpha}{\hbar^2}\left(\hbar^2 s(s+1)-3\hbar^2 m_s^{\,2}\right)-\frac{\beta}{\hbar}\hbar m_s\right\}|s,m_s\rangle=$$
$$=\left\{\alpha\left(s(s+1)-3\hbar^2 m_s^{\,2}\right)-\beta m_s\right\}|s,m_s\rangle$$

So $E=\alpha\left(s(s+1)-3m_s^{\,2}\right)-\beta m_s=\alpha\left(\frac{15}{4}-3m_s^{\,2}\right)-\beta m_s$

and thus

$$E(m_s=-\tfrac{3}{2})=\alpha\left(\tfrac{15}{4}-3\tfrac{9}{4}\right)+\tfrac{3}{2}\beta=-\tfrac{12}{4}\alpha+\tfrac{3}{2}\beta=-3\alpha+\tfrac{3}{2}\beta$$
$$E(m_s=+\tfrac{3}{2})=\alpha\left(\tfrac{15}{4}-3\tfrac{9}{4}\right)-\tfrac{3}{2}\beta=-\tfrac{12}{4}\alpha-\tfrac{3}{2}\beta=-3\alpha-\tfrac{3}{2}\beta$$

$$E(m_s=-\tfrac{1}{2})=\alpha\left(\tfrac{15}{4}-3\tfrac{1}{4}\right)+\tfrac{1}{2}\beta=\tfrac{12}{4}\alpha+\tfrac{1}{2}\beta=3\alpha+\tfrac{1}{2}\beta$$
$$E(m_s=+\tfrac{1}{2})=\alpha\left(\tfrac{15}{4}-3\tfrac{1}{4}\right)-\tfrac{1}{2}\beta=\tfrac{12}{4}\alpha-\tfrac{1}{2}\beta=3\alpha-\tfrac{1}{2}\beta$$

QM A3

QM easy Myat.

1.

(a) $\lambda = \frac{hc}{E} = \frac{1240\ keV\cdot pm}{40\ keV} = 31\ pm$

(b) $K_e = E - E'$

$E' = \frac{hc}{\lambda'} = \frac{hc}{\lambda + \lambda_c}$ from Compton formula $\lambda' - \lambda = \lambda_c(1-\cos\theta)$, $\theta = 90°$

$K_e = 40keV - \frac{1240keV\cdot pm}{(31+2.43)pm} = 40keV - 37.09keV$
$= 2.91keV$

(c) $\lambda_{el} = \frac{h}{\sqrt{2mE}} = \frac{1.226}{\sqrt{E(eV)}}nm = \frac{1.226}{\sqrt{2910}} = 0.0227nm$
$= 22.7pm$

QM A4

2.

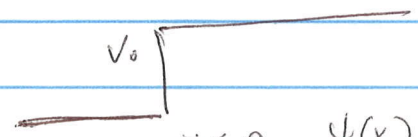

$x<0$ $\psi(x) = e^{ikx} + Be^{-ikx}$, $k = \frac{\sqrt{2mE}}{\hbar}$

$x>0$ $\psi(x) = Ce^{ik_1x}$, $k_1 = \frac{\sqrt{2m(E-V_0)}}{\hbar}$

match at $x=0$:

ψ: $1+B = C$ or $-B + C = 1$

$\frac{d\psi}{dx}$: $ik - ikB = ik_1C$ $B + \frac{k_1}{k}C = 1$

$C\left(1+\frac{k_1}{k}\right) = 2$ $C = \frac{2k}{k+k_1}$

$B = C - 1 = \frac{k-k_1}{k+k_1}$

$T = \frac{k_1|C|^2}{k} = \frac{4k_1k}{(k+k_1)^2}$ $R = |B|^2 = \left(\frac{k-k_1}{k+k_1}\right)^2$

(b) $R + T = \frac{(k-k_1)^2 + 4k_1k}{(k+k_1)^2} = 1$ satisfy conservation of current: $j_{inc} = j_{transm.} + j_{reflected}$

QM B1

Consider a system which is initially in the normalized state

$$\psi(\theta,\phi) = \frac{1}{\sqrt{5}} Y_{1,-1}(\theta,\phi) + a Y_{1,0}(\theta,\phi) + \frac{1}{\sqrt{5}} Y_{1,1}(\theta,\phi)$$

in which a is a positive real constant.

a. Find a.

b. If L_z were measured, what values could one obtain, and with what probabilities?

We now measure L_z and find the value $-\hbar$.

c. Calculate $\langle L_x \rangle$ and $\langle L_y \rangle$.

d. Calculate the uncertainties ΔL_x and ΔL_y and their product $\Delta L_x \Delta L_y$. You may use the equality $\langle L_x{}^2 \rangle = \langle L_y{}^2 \rangle$ without proving it first.

<u>SOLUTION</u>

<u>Part a.</u> Writing $\psi(\theta,\phi) = \sum_{m=-1}^{1} c_m Y_{1,m}(\theta,\phi)$ we require $\sum_{m=-1}^{1} |c_m|^2 = 1$, in other words

$$\left|\frac{1}{\sqrt{5}}\right|^2 + |a|^2 + \left|\frac{1}{\sqrt{5}}\right|^2 = \tfrac{2}{5} + a^2 = 1 \quad \Rightarrow \quad a^2 = \tfrac{3}{5} \quad \Rightarrow \quad a = \sqrt{\tfrac{3}{5}}$$

<u>Part b.</u> The probability to measure $L_z = m\hbar$ equals $|c_m|^2$, so

$$P(m=-1) = |c_{-1}|^2 = \tfrac{1}{5} = 20\%$$
$$P(m=0) = |c_0|^2 = \tfrac{3}{5} = 60\%$$
$$P(m=+1) = |c_{+1}|^2 = \tfrac{1}{5} = 20\%$$

Part c. The wave function has collapsed to $Y_{1,-1}(\theta,\phi) = \langle \theta,\phi \,|\, 1,-1\rangle$. We have $L_x = \frac{1}{2}(L_+ + L_-)$ and $L_y = -\frac{1}{2}i(L_+ - L_-)$, so now

$$L_x = \tfrac{1}{2}(L_+ + L_-) \text{ and } L_y = -\tfrac{1}{2}i(L_+ - L_-)$$

$$\langle \psi \,|\, L_x \,|\, \psi\rangle = \tfrac{1}{2}\langle 1,-1 \,|\, L_+ \,|\, 1,-1\rangle + \tfrac{1}{2}\langle 1,-1 \,|\, L_- \,|\, 1,-1\rangle = \tfrac{1}{2}C\hbar\langle 1,-1 \,|\, 1,0\rangle + \tfrac{1}{2}\langle 1,-1 \,|\, \varnothing\rangle = 0$$
$$\langle \psi \,|\, L_y \,|\, \psi\rangle = -\tfrac{1}{2}i\langle 1,-1 \,|\, L_+ \,|\, 1,-1\rangle + \tfrac{1}{2}i\langle 1,-1 \,|\, L_- \,|\, 1,-1\rangle = -\tfrac{1}{2}iC\hbar\langle 1,-1 \,|\, 1,0\rangle + \tfrac{1}{2}i\langle 1,-1 \,|\, \varnothing\rangle = 0$$

where C is some constant and $|\varnothing\rangle$ is the zero-length ket (for which $\langle \varnothing \,|\, \varnothing\rangle = 0$).

Now for $\ell = 1$ and $m = -1$, we have

$$\langle L^2\rangle = \ell(\ell+1)\hbar^2 = 2\hbar^2 = \langle L_x{}^2 + L_y{}^2 + L_z{}^2\rangle = \langle L_x{}^2\rangle + \langle L_y{}^2\rangle + \langle L_z{}^2\rangle = 2\langle L_x{}^2\rangle + \langle L_z{}^2\rangle = 2\langle L_x{}^2\rangle + (-\hbar)^2$$
$$\Rightarrow \quad \langle L_x{}^2\rangle = \langle L_y{}^2\rangle = \tfrac{1}{2}\hbar^2$$

so that

$$(\Delta L_x)^2 = \langle (L_x - \langle L_x\rangle)^2\rangle = \langle L_x{}^2\rangle - \langle L_x\rangle^2 = \tfrac{1}{2}\hbar^2 - 0 \quad \Rightarrow \quad \Delta L_x = \tfrac{1}{2}\sqrt{2}\,\hbar, \text{ and, similarly, } \Delta L_y = \tfrac{1}{2}\sqrt{2}\,\hbar$$

We find $\Delta L_x \Delta L_y = (\tfrac{1}{2}\sqrt{2}\,\hbar)(\tfrac{1}{2}\sqrt{2}\,\hbar) = \tfrac{1}{2}\hbar^2$

QM B2

The Hamiltonian for a one-dimensional harmonic oscillator is

$$\hat{H} = \frac{\hat{p}^2}{2m} + \tfrac{1}{2} m\omega^2 \hat{x}^2 .$$

We write its energy eigenkets as $|n\rangle$ ($n = 0,1,2,\ldots$) for energy $E_n = (n + \tfrac{1}{2})\hbar\omega$.

a. Suppose the system is in the normalized state $|\varphi\rangle$ given by $|\varphi\rangle = c_0|0\rangle + c_1|1\rangle$, and that the expectation value of the energy is known to be $\hbar\omega$. What are $|c_0|$ and $|c_1|$?

b. Now choose c_0 to be real and positive, but let c_1 have any phase: $c_1 = |c_1| e^{i\theta}$. Suppose further that not only is the expectation value of the energy known to be $\hbar\omega$, but the expectation value of x is also known: $\langle\varphi|x|\varphi\rangle = \frac{1}{2}\sqrt{\frac{\hbar}{m\omega}}$. Calculate the phase angle θ.

c. Now suppose the system is in the state $|\varphi\rangle$ at time $t = 0$, i.e., $|\psi(t=0)\rangle = |\varphi\rangle$. Calculate $|\psi(t)\rangle$ at some later time t. Use the values of c_0 and c_1 you found in parts *a.* and *b.*

d. Also calculate the expectation value of x as a function of time. With what angular frequency does it oscillate? Again, use the values of c_0 and c_1 you found in parts *a.* and *b.*

<u>SOLUTION</u>

<u>Part a.</u>

$$\hbar\omega = \langle\varphi|H|\varphi\rangle = |c_0|^2 E_0 + |c_1|^2 E_1 = |c_0|^2 \tfrac{1}{2}\hbar\omega + |c_1|^2 \tfrac{3}{2}\hbar\omega = \hbar\omega\left(\tfrac{1}{2}|c_0|^2 + \tfrac{3}{2}|c_1|^2\right)$$

$$\Rightarrow \quad \tfrac{1}{2}|c_0|^2 + \tfrac{3}{2}|c_1|^2 = 1$$

Normalization: $|c_0|^2 + |c_1|^2 = 1$, so we have

$$\begin{cases} \tfrac{1}{2}|c_0|^2 + \tfrac{3}{2}|c_1|^2 = 1 \\ |c_0|^2 + |c_1|^2 = 1 \end{cases} \quad \Rightarrow \quad |c_0| = |c_1| = \tfrac{1}{2}\sqrt{2}$$

Part b.

Recall $\hat{x} = \sqrt{\frac{\hbar}{2m\omega}}(\hat{a} + \hat{a}^\dagger)$, so we have

$$\hat{x} = \sqrt{\frac{\hbar}{2m\omega}}(\hat{a} + \hat{a}^\dagger)$$

$$\frac{1}{2}\sqrt{\frac{\hbar}{m\omega}} = \langle\varphi|x|\varphi\rangle = \sqrt{\frac{\hbar}{2m\omega}}\langle\varphi|\hat{a}|\varphi\rangle + \sqrt{\frac{\hbar}{2m\omega}}\langle\varphi|\hat{a}^\dagger|\varphi\rangle =$$
$$= \sqrt{\frac{\hbar}{2m\omega}}\left(\langle 0|c_0^* + \langle 1|c_1^*\right)\hat{a}\left(c_0|0\rangle + c_1|1\rangle\right) + \sqrt{\frac{\hbar}{2m\omega}}\left(\langle 0|c_0^* + \langle 1|c_1^*\right)\hat{a}^\dagger\left(c_0|0\rangle + c_1|1\rangle\right)$$

Now

$$\hat{a}|\varphi\rangle = \hat{a}\left(\cancel{c_0|0\rangle} + c_1|1\rangle\right) = c_1\hat{a}|1\rangle = c_1|0\rangle$$
$$\hat{a}^\dagger|\varphi\rangle = \hat{a}^\dagger\left(c_0|0\rangle + c_1|1\rangle\right) = \left(c_0\hat{a}^\dagger|0\rangle + c_1\hat{a}^\dagger|1\rangle\right) = \left(c_0|1\rangle + (\ldots)|2\rangle\right)$$

$$\frac{1}{2}\sqrt{\frac{\hbar}{m\omega}} = \langle\varphi|x|\varphi\rangle = \sqrt{\frac{\hbar}{2m\omega}}\langle\varphi|\hat{a}|\varphi\rangle + \sqrt{\frac{\hbar}{2m\omega}}\langle\varphi|\hat{a}^\dagger|\varphi\rangle =$$
$$= \sqrt{\frac{\hbar}{2m\omega}}\left(\langle 0|c_0^* + \cancel{\langle 1|c_1^*}\right)\left(c_1|0\rangle\right) + \sqrt{\frac{\hbar}{2m\omega}}\left(\cancel{\langle 0|c_0^*} + \langle 1|c_1^*\right)\left(c_0|1\rangle + \cancel{(\ldots)|2\rangle}\right) =$$
$$= \sqrt{\frac{\hbar}{2m\omega}}\left(c_0^* c_1 + c_0 c_1^*\right) = \sqrt{\frac{\hbar}{2m\omega}}\tfrac{1}{2}\sqrt{2}\left(c_1 + c_1^*\right) \text{ because } c_0 = \tfrac{1}{2}\sqrt{2} \in \mathbb{R}$$

We get

$$\frac{1}{2}\sqrt{\frac{\hbar}{m\omega}} = \sqrt{\frac{\hbar}{2m\omega}}\tfrac{1}{2}\sqrt{2}\left(c_1 + c_1^*\right) \quad\Rightarrow\quad 1 = \left(c_1 + c_1^*\right) = |c_1|e^{i\theta} + |c_1|e^{-i\theta} = \cancel{\tfrac{1}{2}}\sqrt{2}\,(\cancel{2}\cos\theta)$$
$$\Rightarrow\quad \cos\theta = \tfrac{1}{2}\sqrt{2} \quad\Rightarrow\quad \theta = \tfrac{1}{4}\pi (= 45°)$$

Part c.

$$|\psi(t)\rangle = c_0 e^{-iE_0 t/\hbar}|0\rangle + c_1 e^{-iE_1 t/\hbar}|1\rangle = \tfrac{1}{2}\sqrt{2}\, e^{-i\frac{1}{2}\omega t}|0\rangle + \tfrac{1}{2}\sqrt{2}\, e^{i\pi/4} e^{-i\frac{3}{2}\omega t}|1\rangle$$

Part d.

We had seen $\langle\varphi|x|\varphi\rangle = \sqrt{\frac{\hbar}{2m\omega}}\left(c_0^* c_1 + c_0 c_1^*\right) = \sqrt{\frac{\hbar}{2m\omega}}2\,\mathrm{Re}(c_0^* c_1)$, so now

$$\langle\psi(t)\,|\,x\,|\,\psi(t)\rangle = \sqrt{\frac{\hbar}{2m\omega}}\,2\,\mathrm{Re}(\tfrac{1}{2}\sqrt{2}e^{\frac{1}{2}i\omega t}\,\tfrac{1}{2}\sqrt{2}\;e^{\frac{1}{4}i\pi}e^{-\frac{3}{2}i\omega t}) = \sqrt{\frac{\hbar}{2m\omega}}\,\mathrm{Re}(e^{\frac{1}{2}i\omega t}e^{\frac{1}{4}i\pi}e^{-\frac{3}{2}i\omega t}) =$$

$$= \sqrt{\frac{\hbar}{2m\omega}}\cos(-\omega t + \tfrac{1}{4}\pi) = \sqrt{\frac{\hbar}{2m\omega}}\cos(\omega t - \tfrac{1}{4}\pi)$$

The angular frequency of oscillation is ω.

(*from* http://dfcd.net/articles/firstyear/solutions/s06-2.pdf)

a. For the simple harmonic oscillator, $H|\psi_n\rangle = (n+\frac{1}{2})\hbar\omega$

$$\hbar\omega = \langle\Phi|H|\Phi\rangle = \left(\langle\psi_0|c_0^* + \langle\psi_1|c_1^*\right)H\left(c_0|\psi_0\rangle + c_1|\psi_1\rangle\right)$$

$$= |c_0|^2\langle\psi_0|H|\psi_0\rangle + |c_1|^2\langle\psi_1|H|\psi_1\rangle \quad \text{by orthogonality}$$

$$= |c_0|^2\left(\tfrac{1}{2}\hbar\omega\right) + |c_1|^2\left(\tfrac{3}{2}\hbar\omega\right)$$

$$\Rightarrow 1 = \tfrac{1}{2}|c_0|^2 + \tfrac{3}{2}|c_1|^2$$

Normalization of $|\Phi\rangle$ implies $\langle\Phi|\Phi\rangle = 1 \Rightarrow |c_0|^2 + |c_1|^2 = 1$

$$\Rightarrow 1 = \tfrac{1}{2}|c_0|^2 + \tfrac{3}{2}\left(1 - |c_0|^2\right) = \tfrac{3}{2} - |c_0|^2$$

$$\Rightarrow |c_0|^2 = \tfrac{1}{2} \quad \text{and} \quad |c_1|^2 = \tfrac{1}{2}$$

Therefore $|c_0| = \frac{1}{\sqrt{2}}$ and $|c_1| = \frac{1}{\sqrt{2}}$

b. Recall $x = \sqrt{\frac{\hbar}{2m\omega}}\,(a + a^+)$

$$\frac{1}{2}\sqrt{\frac{\hbar}{m\omega}} = \langle\Phi|x|\Phi\rangle = \sqrt{\frac{\hbar}{2m\omega}}\left[\langle\psi_0|c_0^* c_1 a|\psi_1\rangle + \langle\psi_1|c_1^* c_0 a^+|\psi_0\rangle\right]$$

$$= \sqrt{\frac{\hbar}{2m\omega}}\left[c_0^* c_1 + c_1^* c_0\right]$$

$$= \frac{1}{\sqrt{2}}\sqrt{\frac{\hbar}{2m\omega}}\left[c_1 + c_1^*\right] \quad \text{Since } c_0 \text{ real and pos} \Rightarrow c_0 = \frac{1}{\sqrt{2}}$$

$$\Rightarrow 1 = c_1 + c_1^* = \frac{1}{\sqrt{2}}e^{i\theta_1} + \frac{1}{\sqrt{2}}e^{-i\theta_1} = \frac{1}{\sqrt{2}}2\cos(\theta_1)$$

$$\Rightarrow \cos(\theta_1) = \frac{\sqrt{2}}{2} \Rightarrow \theta_1 = \pi/4$$

c. $|\psi(t)\rangle = e^{-iHt/\hbar}|\psi(0)\rangle = \frac{1}{\sqrt{2}}e^{-i\omega t/2}|\psi_0\rangle + \frac{1}{\sqrt{2}}e^{-3i\omega t/2 + i\pi/4}|\psi_1\rangle$

$\langle\psi(t)|x|\psi(t)\rangle = \sqrt{\frac{\hbar}{2m\omega}}\left[\frac{1}{2}e^{-i\omega t + i\pi/4} + \frac{1}{2}e^{i\omega t - i\pi/4}\right] = \sqrt{\frac{\hbar}{2m\omega}}\cos\left(\omega t - \frac{\pi}{4}\right)$

The angular frequency of oscillation is ω.

QM B3

QM long. 1 — Ilya F.

1. $\psi_n(x) = \sqrt{\frac{2}{L}} \sin \frac{\pi n x}{L}$

(a) $x \to x + \frac{L}{2}$

$$\psi_n(x) = \sqrt{\frac{2}{L}} \sin\left[\frac{\pi n}{L}\left(x + \frac{L}{2}\right)\right] = \sqrt{\frac{2}{L}} \sin\left(\frac{\pi n x}{L} + \frac{\pi n}{2}\right)$$

(1) $= (-1)^k \sqrt{\frac{2}{L}} \sin \frac{2\pi k x}{L}$ if $n = 2k$, $k = 1, 2, \ldots$

(2) $(-1)^k \sqrt{\frac{2}{L}} \cos \frac{\pi(2k+1)x}{L}$ if $n = 2k+1$, $k = 0, 1, \ldots$

(b) yes, function (1) has $P = -1$
function (2) has $P = +1$

(c) no, $-i\hbar \frac{d}{dx}$ does not return the same state

(d) $-\int \psi_n i\hbar \frac{d\psi_n}{dx} dx = 0$ since integrand is odd

$$\langle p^2 \rangle = -\hbar^2 \int \psi_n \frac{d^2\psi_n}{dx^2} dx = \hbar^2 \left(\frac{\pi n}{L}\right)^2 \int \psi_n^2 dx = \hbar^2 \left(\frac{\pi n}{L}\right)^2$$

(e) $\Delta p = \sqrt{\langle p^2 \rangle - \langle p \rangle^2} = \frac{\hbar \pi n}{L}$

because ψ_n is a superposition of momentum eigenstates with $p = \pm \frac{\hbar \pi n}{L}$

(f) $\frac{2}{L} \int_{-L/2}^{L/2} \cos \frac{\pi x}{L} \left(-x i\hbar \frac{d}{dx}\right) \cos \frac{\pi x}{L} dx = \frac{2i\hbar}{L} \frac{\pi}{L} \int x \cos \frac{\pi x}{L} \sin \frac{\pi x}{L} dx$

$$= \frac{i\hbar\pi}{L^2} \int_{-L/2}^{L/2} x \sin \frac{2\pi x}{L} dx = \frac{i\hbar\pi}{L^2} \left[-x \frac{L}{2\pi} \cos \frac{2\pi x}{L} \Big|_{-L/2}^{L/2} \right.$$

$$\left. + \frac{L}{2\pi} \int_{-L/2}^{L/2} \cos \frac{2\pi x}{L} dx \right] = \frac{i\hbar\pi}{L^2} \left[-\frac{L^2}{4\pi}(-1) \cdot 2 + \left(\frac{L}{2\pi}\right)^2 \sin \frac{2\pi x}{L} \Big|_{-L/2}^{L/2} \right]$$

$= \frac{i\hbar}{2} \longrightarrow xp$ is nonhermitian

QM B4

2.

$$H = -\gamma \vec{S}\cdot\vec{B} = -\gamma \frac{\hbar}{2} B \begin{pmatrix} 0 & 1 \\ 1 & 0 \end{pmatrix}$$

(a) $$i\hbar \frac{\partial}{\partial t}\begin{pmatrix} \chi_1 \\ \chi_2 \end{pmatrix} = -\frac{\hbar}{2}\gamma B \begin{pmatrix} \chi_2 \\ \chi_1 \end{pmatrix}$$

(b) $$i\dot{\chi}_1 = -\frac{1}{2}\gamma B \chi_2 \qquad i\dot{\chi}_2 = -\frac{1}{2}\gamma B \chi_1 \longrightarrow \begin{pmatrix} \chi_1 \\ \chi_2 \end{pmatrix} = e^{i\omega t}\begin{pmatrix} a \\ b \end{pmatrix}$$

$$-\omega a = -\frac{1}{2}\gamma B b \qquad -\omega b = -\frac{1}{2}\gamma B a \longrightarrow \omega^2 = \left(\frac{1}{2}\gamma B\right)^2$$

$$\omega = \pm\frac{1}{2}\gamma B$$

for $\omega = +\frac{1}{2}\gamma B \quad a = b$

$\omega = -\frac{1}{2}\gamma B \quad b = -a$

general solution $\chi = c_1 e^{i\omega t}\frac{1}{\sqrt{2}}\begin{pmatrix} 1 \\ 1 \end{pmatrix} + c_2 e^{-i\omega t}\frac{1}{\sqrt{2}}\begin{pmatrix} 1 \\ -1 \end{pmatrix}$

at $t=0 \quad \chi = \begin{pmatrix} 1 \\ 0 \end{pmatrix} \longrightarrow c_1 = c_2 = \frac{1}{\sqrt{2}}$

$$\chi = \frac{1}{2}e^{i\omega t}\begin{pmatrix} 1 \\ 1 \end{pmatrix} + \frac{1}{2}e^{-i\omega t}\begin{pmatrix} 1 \\ -1 \end{pmatrix} = \begin{pmatrix} \cos\omega t \\ i\sin\omega t \end{pmatrix}$$

(c) $$\langle S_z \rangle = \frac{\hbar}{2}\begin{pmatrix} a^* & b^* \end{pmatrix}\begin{pmatrix} 1 & 0 \\ 0 & -1 \end{pmatrix}\begin{pmatrix} a \\ b \end{pmatrix} = \frac{\hbar}{2}\left(|a|^2 - |b|^2\right) =$$

$$= \frac{\hbar}{2}\left(\cos^2\omega t - \sin^2\omega t\right) = \frac{\hbar}{2}\cos 2\omega t$$

$$\langle S_y \rangle = \frac{\hbar}{2}\begin{pmatrix} a^* & b^* \end{pmatrix}\begin{pmatrix} 0 & -i \\ i & 0 \end{pmatrix}\begin{pmatrix} a \\ b \end{pmatrix} = \left(-ia^*b + ib^*a\right)\frac{\hbar}{2} =$$

$$= 2\,\mathrm{Im}\left(a^*b\right)\frac{\hbar}{2} = 2\,\mathrm{Im}\left(\cos\omega t\; i\sin\omega t\right)\frac{\hbar}{2} = \sin 2\omega t\,\frac{\hbar}{2}$$

E&M A1

An isolated sphere of perfectly conducting material is surrounded by air. Though normally a good insulator, air breaks down (it becomes conductive) for electric fields beyond 3.0 kV/mm (the so-called *dielectric strength* of air). The sphere's radius is 5.0 cm. What is the maximum amount of electrostatic energy the sphere can store before breakdown occurs? Assume the electrostatic potential is zero at infinite distance from the sphere.

<u>SOLUTION</u>

For a charge q on the sphere we have

$$E = k\frac{q}{R^2} \quad \Rightarrow \quad q = \frac{ER^2}{k}$$
$$V = k\frac{q}{R} = ER$$

So now $U = \frac{1}{2}qV = \frac{1}{2}\frac{ER^2}{k}ER = 2\pi\varepsilon_0 E^2 R^3 = 2\pi(8.85\times10^{-12})(3\times10^{6})^2(5\times10^{-2})^3 = 0.063 = 63\text{ mJ}$

E&M A2

The diagram shows part of an electronic circuit. Calculate the potential at point P.

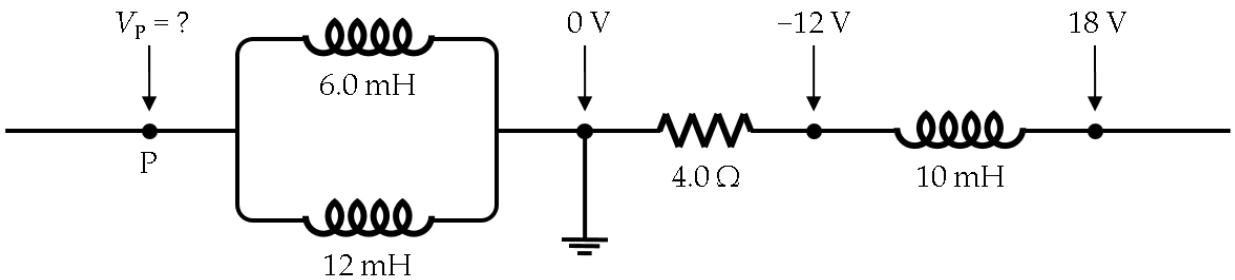

<u>SOLUTION</u>

Left two inductors:

$$\frac{1}{L_{\text{eff}}} = \frac{1}{L_1} + \frac{1}{L_2} = \frac{1}{6} + \frac{1}{12} = \frac{3}{12} = \frac{1}{4} \quad \Rightarrow \quad L_{\text{eff}} = 4.0 \text{ mH}$$

From the 10 mH inductor we find $\frac{di}{dt} = \frac{\Delta V}{L} = \frac{18-(-12)}{10\times 10^{-3}} = 3000 \text{ A/s}$

So $\Delta V = 0 - V_P = L_{\text{eff}} \frac{di}{dt} = 4\times 10^{-3} * 3000 = 12 \text{ V} \quad \Rightarrow \quad V_P = -12 \text{ V}$

E&M A3

2. If the electric field generated by a static point charge is proportional to $1/r^3$, where r is the distance to the charge, will Guass' law still be correct? Justify your answer.

Guass' law breaks.

The integral form of Guass' law is $\oiint_S \vec{E}\cdot d\vec{A} = \frac{Q}{\varepsilon_0}$.

If $E = k\frac{1}{r^3}$ and integrate over a spherical surface, then $\oiint_S \vec{E}\cdot d\vec{A} = k\cdot\frac{1}{r^3}\cdot 4\pi r^2 = \frac{4\pi k}{r}$. This integral varies with r and even vanishes at $r\to\infty$, which isn't physical.

E&M A4

1. A circuit consisting of infinite resistors is as shown in the figure. Please find the resistance between A and B in terms of R_1 and R_2.

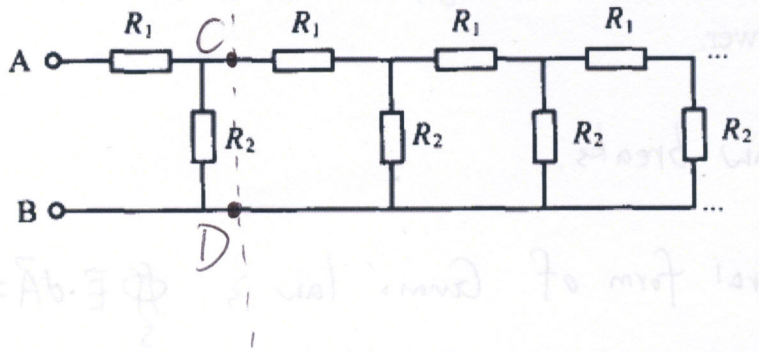

If the first R_1 and R_2 are cut off, the remaining circuit has a resistance $R_{CD} = R_{AB}$.

Thus, $R_{AB} = R_1 + \dfrac{1}{\frac{1}{R_2} + \frac{1}{R_{CD}}}$

$$= R_1 + \frac{R_2 R_{CD}}{R_2 + R_{CD}}$$

$$R_{AB} - R_1 = \frac{R_2 R_{AB}}{R_2 + R_{AB}}$$

$$R_{AB}^2 - R_1 R_{AB} - R_1 R_2 = 0$$

$$R_{AB} = \frac{R_1 + \sqrt{R_1^2 + 4R_1R_2}}{2} \quad (R_{AB} > R_1)$$

E&M B1

A flat square loop of wire of length $2a$ on each side carries a stationary current I. Calculate the magnitude of the magnetic field at the center of the square.

<u>SOLUTION</u>

This field is 4 times the field of one side. The field of one side is the field at a point a distance a away from wire.

$$dB(\text{for one side}) = \frac{\mu_0}{4\pi}\frac{Id\boldsymbol{\ell}\times\hat{\mathbf{r}}}{r^2} = \frac{\mu_0}{4\pi}\frac{1}{r^2}Idy\sin\phi = \frac{\mu_0}{4\pi}\frac{1}{y^2+a^2}Idy\frac{a}{\sqrt{y^2+a^2}} = \frac{\mu_0 Ia}{4\pi}\frac{dy}{(y^2+a^2)^{3/2}}$$

$$B(\text{of one side}) = \frac{\mu_0 Ia}{4\pi}\int_{-a}^{a}\frac{dy}{(y^2+a^2)^{3/2}} = \frac{\mu_0 Ia}{4\pi}2\int_{0}^{a}\frac{dy}{(y^2+a^2)^{3/2}} = \frac{\mu_0 Ia}{2\pi}\left[\frac{y}{a^2(y^2+a^2)^{1/2}}\right]_0^a = \frac{\mu_0 Ia}{2\pi}\left[\frac{a}{a^2(a^2+a^2)^{1/2}}\right] =$$

$$= \frac{\mu_0 I}{2\pi}\frac{1}{(2a^2)^{1/2}} = \frac{\mu_0 I}{2\pi}\frac{1}{\sqrt{2}\,a} = \frac{\mu_0 I}{2\sqrt{2}\pi a}$$

$$B_{\text{tot}} = 4*\frac{\mu_0 I}{2\sqrt{2}\pi a} = \frac{\sqrt{2}}{\pi}\frac{\mu_0 I}{a}$$

The integral must be provided in the cheat sheet:

In[5]:= $\text{Integrate}\left[\frac{1}{(y^2+a^2)^{3/2}}, y\right]$

Out[5]= $\frac{y}{a^2\sqrt{a^2+y^2}}$

In[6]:= $\text{Integrate}\left[\frac{1}{(y^2+a^2)^{3/2}}, \{y, -a, a\}\right]$

Out[6]= $\frac{\sqrt{2}\sqrt{a^2}}{a^3}$

EM Hard

E&M B2

All space is filled with a material with uniform, fixed magnetization $\mathbf{M}$, except for the region $0 < z < a$, in which there is vacuum. The magnetization is $\mathbf{M} = M\hat{\mathbf{u}}$, where $\hat{\mathbf{u}}$ is a unit vector in the yz plane that makes an angle θ with the z-axis: $\hat{\mathbf{u}} = (\sin\theta)\hat{\mathbf{y}} + (\cos\theta)\hat{\mathbf{z}}$. Calculate the magnetic field $\mathbf{B}$ and the auxiliary field $\mathbf{H}$ everywhere.

<u>SOLUTION</u>

There are no free current densities, so if there's a $\mathbf{B}$ field it must be due to bound currents.

The bound volume current density $\mathbf{J}_\mathrm{b} = \nabla \times \mathbf{M} = \mathbf{0}$ because $\mathbf{M}$ is uniform. The bound surface current density is $\mathbf{K}_\mathrm{b} = \mathbf{M} \times \hat{\mathbf{n}} = M\begin{pmatrix} 0 \\ \sin\theta \\ \cos\theta \end{pmatrix} \times \begin{pmatrix} 0 \\ 0 \\ \pm 1 \end{pmatrix} = M\begin{pmatrix} \pm\sin\theta \\ 0 \\ 0 \end{pmatrix}$ for the surface at $z = 0$ (plus sign) and the surface at $z = a$ (minus sign). It follows from symmetry and Ampère's law that these bound currents give rise to a uniform magnetic field $\mathbf{B} = -(\mu_0 M \sin\theta)\hat{\mathbf{y}}$ inside the gap; outside the gap, $\mathbf{B} = \mathbf{0}$.

The auxiliary field follows from $\mathbf{B} = \mu_0(\mathbf{H} + \mathbf{M}) \quad \Rightarrow \quad \mathbf{H} = \dfrac{\mathbf{B}}{\mu_0} - \mathbf{M}$

(1) In the gap: $\mathbf{H} = \dfrac{\mathbf{B}}{\mu_0} - \mathbf{M} = -\dfrac{(\mu_0 M \sin\theta)}{\mu_0}\hat{\mathbf{y}} - \mathbf{0} = -(M\sin\theta)\hat{\mathbf{y}}$

(2) Outside the gap: $\mathbf{H} = \dfrac{\mathbf{B}}{\mu_0} - \mathbf{M} = \mathbf{0} - \mathbf{M} = -(M\sin\theta)\hat{\mathbf{y}} - (M\cos\theta)\hat{\mathbf{z}}$

To verify this result we can use the magnetostatic charge density. For instance, for the bottom surface we have $\sigma_M = \mathbf{M} \cdot \hat{\mathbf{n}} = M_z = M\cos\theta$. From Gauss's law for magnetostatics, we have $\oint_S \mathbf{H} \cdot d\mathbf{a} = q_{M,\mathrm{encl}}$. Applying this to a pillbox of area A enclosing part of the surface, calling the auxiliary field inside/outside gap, $\mathbf{H}_\mathrm{i}/\mathbf{H}_\mathrm{o}$, we find

$\mathbf{H}_\mathrm{i} \cdot \hat{\mathbf{z}}A + \mathbf{H}_\mathrm{o} \cdot (-\hat{\mathbf{z}})A = A\sigma_M \quad \Rightarrow \quad H_{\mathrm{i},z} - H_{\mathrm{o},z} = \sigma_M = M\cos\theta$.

This agrees with our result $\mathbf{H}_\mathrm{i} = -(M\sin\theta)\hat{\mathbf{y}}$ and $\mathbf{H}_\mathrm{o} = -(M\sin\theta)\hat{\mathbf{y}} - (M\cos\theta)\hat{\mathbf{z}} = \mathbf{H}_\mathrm{i} - (M\cos\theta)\hat{\mathbf{z}}$

$\Rightarrow \quad \mathbf{H}_\mathrm{i} - \mathbf{H}_\mathrm{o} = (M\cos\theta)\hat{\mathbf{z}}$

E&M B3

3. In the lab, a ball with mass m and electric charge +q is hung in a horizontal uniform electric field E by a string of negligible mass. If the ball is raised to the position shown in the figure and dropped from still, what's the largest angle that it will swing to?

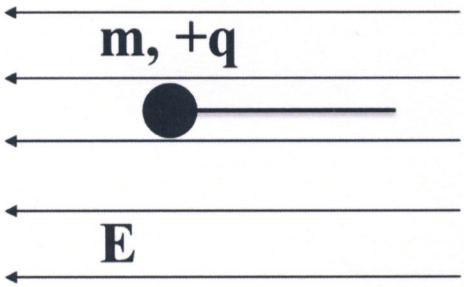

$F_c = qE$

$F_g = mg$

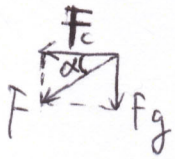

$\vec{F} = \vec{F_c} + \vec{F_g}$

The combination of electric field and gravity works as an "effective gravity" in the direction of $\vec{F}$ with strength $\frac{|\vec{F}|}{m}$.

In this case, the ball will swing to a position symmetric with the initial position about the axis along $\vec{F}$.

$$\alpha = \arctan\frac{F_g}{F_c} = \arctan\frac{mg}{qE}$$

the largest angle that the ball will reach is

$$2\alpha = 2\cdot\arctan\frac{mg}{qE}$$

E&M B4

4. A slab of isotropic dielectric material of permittivity ε is infinite in the plane and is exposed to an external electric field $\mathbf{E}_0$ perpendicular to the slab plane. Find the polarization density **P** inside the slab.

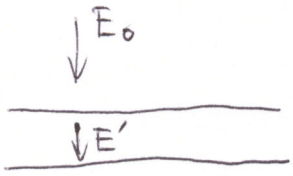

$D_\perp$ is continuous

$$\varepsilon_0 \vec{E}_0 = \varepsilon \vec{E}'$$

$$\therefore \vec{E}' = \frac{\varepsilon_0}{\varepsilon} \vec{E}_0$$

$$\because \vec{D} = \varepsilon_0 \vec{E}' + \vec{P}$$

$$\therefore \vec{P} = \varepsilon_0 \vec{E}_0 - \varepsilon_0 \vec{E}'$$

$$= \left(\varepsilon_0 - \frac{\varepsilon_0^2}{\varepsilon}\right) \vec{E}_0$$