UNL Department of Physics and Astronomy

# Preliminary Examination - Day 2
# May 10, 2013

This test covers the topics of *Electromagnetism* (Topic 1) and *Quantum Mechanics* (Topic 2). Each topic has 4 "A" questions and 4 "B" questions. Work two problems from each group. Thus, you will work on a total of 8 questions today, 4 from each topic.

**Electromagnetism Group A** - Answer only two Group A questions

**A1** The entire space is filled with metal, except for the quadrant ($x > 0$, $y > 0$), which is empty. A positive point charge $Q$ is placed at a point ($2a$, $a$, 0). Using the method of image charges, find the force acting on the charge $Q$. Explain why this method gives the correct result.

**A2** A spherical cavity of radius $a$ is hollowed out of a solid, neutral conducting sphere of radius $b$. The center of the cavity is a distance $c$ from the center of the solid sphere. A point charge $q$ is placed at the center of the cavity.

*a.* Find the surface charge densities at the two points indicated by "**σ = ?**".
*b.* Find the field magnitudes at the two points indicated by "**E = ?**" .
*c.* What is the magnitude of the force on $q$?

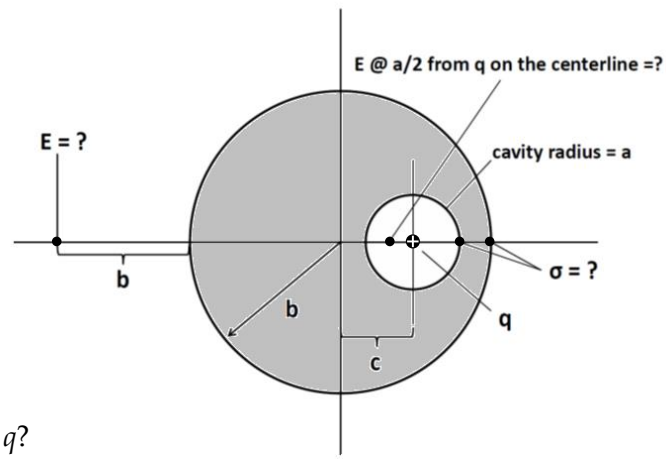


**A3** A rectangular loop of very long vertical dimension and width 20 cm with a resistance of 150 ohms and mass of 15 grams falls out of a magnetic field of strength 25 teslas as shown. What is the terminal velocity of the loop?

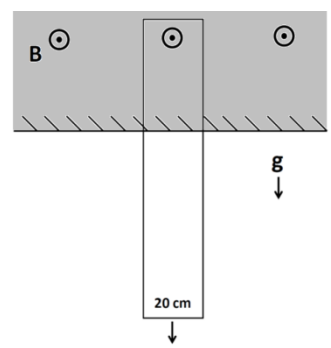


**A4** Two concentric conducting hollow spheres have radii of 5 cm and 10 cm. The outer sphere is grounded and the space between the two spheres is filled with dielectric oil with dielectric constant $\varepsilon = 2.5$. If the oil can support a maximum field $E = 5 \times 10^6$ N/C before it breaks down, what is the maximum amount of charge that can be placed on the inner sphere?

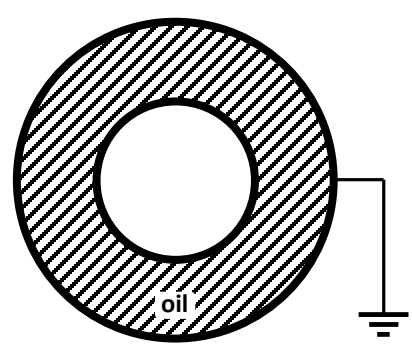

**Electromagnetism Group B** - Answer only two Group B questions

**B1** Three concentric conducting spherical shells have radii $a$, $b$, and $c$, such that $a < b < c$. Initially, the inner shell is uncharged, the middle shell has charge $Q$, and the outer shell has charge $-Q$.

*a.* Find the electric potentials of the three shells.
*b.* If the inner and outer shells are now connected by a wire that is insulated as it passes through the middle shell, what is the electric potential of each of the three shells, and what is the final charge on each shell?

**B2** A plane harmonic electromagnetic wave has intensity 1400 W/cm$^2$. Find:

*a.* the energy density in the wave;
*b.* the amplitude of the electric field vector;
*c.* the amplitude of the magnetic field vector;
*d.* the amplitude of the Poynting vector.
*e.* Suppose this wave strikes a perfect absorber. What pressure does it exert?
*f.* How does your answer change if the wave strikes a perfect reflector?

**B3** A perfect conductor exists in the half-infinite volume $y < 0$. A point charge of 5 C sits at $(x, y, z) = (0\text{ m}, 5\text{ m}, 0\text{ m})$. How much work was required to bring this charge from infinitely far away on the $y$-axis to this point?

**B4** A ring of height $H$ is cut out of a hollow cylinder of radius $R$. This ring is homogeneously charged, and its total charge is $Q$. The ring rotates about its axis at constant angular velocity $\omega$. Find the directions and magnitudes of the electric and magnetic fields at the geometric center of the ring.

**Quantum Mechanics Group A** - Answer only two Group A questions

**A1** A nitrogen nucleus (mass 14× the proton mass) emits a photon of energy 6.2 MeV. If the nucleus was initially at rest, what is its recoil energy in eV?

**A2** A neutron moving in one dimension is confined to the interval $-b < x < b$ , where $b = 10$ cm. Its wavefunction is shown in the figure; $A$ is a positive real-valued constant.

*a.* Determine the numerical value of the constant $A$, making sure to include its unit.

*b.* What is the probability to find the neutron between $x = 0$ and $x = +b$?

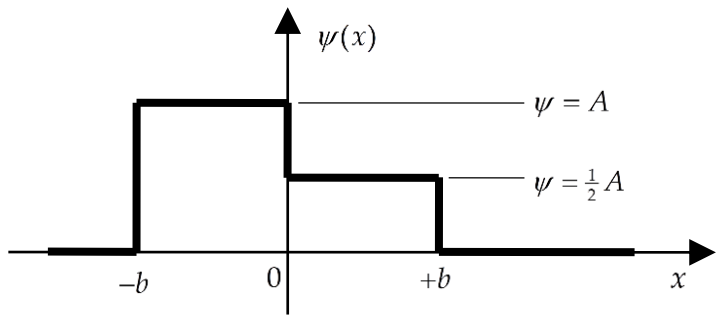


**A3** The (distinct) operators $\mathsf{A}$ and $\mathsf{B}$ are both Hermitian, but the operator $\mathsf{L}$ is not. For each of the five operators $\Omega_1 \ldots \Omega_5$ below, determine if they are Hermitian or not. Show your work.

*a.* $\Omega_1 = i\mathsf{A}$

*b.* $\Omega_2 = \mathsf{BLA} - \mathsf{AL}^\dagger\mathsf{B}$

*c.* $\Omega_3 = (1 + i\mathsf{L})(1 - i\mathsf{L}^\dagger)$

*d.* $\Omega_4 = i(\mathsf{L} - \mathsf{L}^\dagger)$

*e.* $\Omega_5 = [\mathsf{L}^\dagger\mathsf{B}, \mathsf{BL}]$

**A4** We consider a one-dimensional harmonic oscillator (point particle in a parabolic potential) with normalized stationary states $\varphi_n(x)$ and corresponding eigenenergies $(n + \frac{1}{2})\hbar\omega_0$ ($n = 0, 1, 2, \ldots$). At time $t = 0$, its wavefunction is given by

$$\psi(x, t = 0) = \tfrac{1}{2} i\, \varphi_0(x) - \tfrac{1}{2} i\, \varphi_2(x) + \tfrac{1}{2}\, \varphi_4(x) + \tfrac{1}{2}\, \varphi_5(x) .$$

*a.* Show that this wavefunction is normalized.

*b.* If we would measure the total energy of the particle at time $t = 0$ , what energy values could we find, and with what probabilities?

*c.* Calculate the expectation value of the energy for $t > 0$.

**Quantum Mechanics Group B** - Answer only two Group B questions

**B1** For wavefunctions in one dimension, the parity operator $\hat{P}$ is defined by $\hat{P}\psi(x) = \psi(-x)$ .

*a.* Show that $\hat{P}$ is Hermitian (self-adjoint).

*b.* Use $\hat{P}\hat{P} = \hat{I}$ ($\hat{I}$ = identity operator) to calculate the eigenvalues of $\hat{P}$.

*c.* Demonstrate that, for any wavefunction $\psi(x)$, the function $(\hat{I} - \hat{P})\psi(x)$ is an eigenfunction of $\hat{P}$, and calculate the eigenvalue.

*d.* Calculate $\langle \hat{P} \rangle$, the expectation value of $\hat{P}$, for the normalized wavefunction

$$\varphi(x) = \begin{cases} (2/a)^{1/2} \sin(\pi x / a) & \text{for } 0 < x < a \\ 0 & \text{elsewhere} \end{cases}$$

which is shown in the figure.

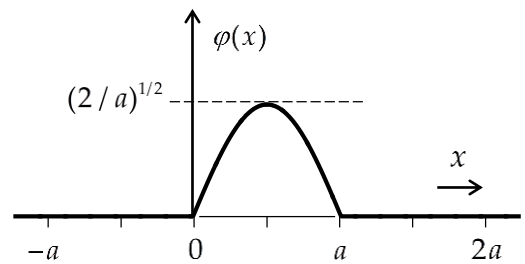


**B2** A particle of energy $E$ is incident on a potential barrier of the form

$$V(x) = \begin{cases} 0 & \text{for } x < -L,\ x > L \\ V_0 & \text{for } -L < x < L \end{cases}$$

*a.* Suppose $E < V_0$. Write down a wave function in three regions $x < -L$ , $-L < x < L$, and $x > L$, and set up equations allowing you to find the transmission and reflection coefficients (you don't need to calculate these coefficients).

*b.* Is the Hamiltonian for this problem symmetric with respect to the inversion operation, $x \to -x$? Is the wavefunction found in part *a.* symmetric? Explain why, or why not.

**B3** Consider the one-dimensional motion of a free particle, and the three operators $\hat{H} = \hat{p}_x^{\,2} / 2m$, $\hat{p}_x$, and $\hat{P}$ (the parity operator). Do all these operators mutually commute?

- If they *do*, construct the complete set of states that are simultaneous eigenstates of all three operators.
- If they *don't*, construct two different complete sets of commuting observables from these three operators and obtain the corresponding sets of eigenstates.

**B4** We consider a particle with spin 1. We use the three eigenkets of $\hat{S}_z$ as the basis for the particle's spin state, in the following notation: $\hat{S}_z \begin{pmatrix} 1 \\ 0 \\ 0 \end{pmatrix} = \hbar \begin{pmatrix} 1 \\ 0 \\ 0 \end{pmatrix}$, $\hat{S}_z \begin{pmatrix} 0 \\ 1 \\ 0 \end{pmatrix} = 0 \begin{pmatrix} 0 \\ 1 \\ 0 \end{pmatrix}$, $\hat{S}_z \begin{pmatrix} 0 \\ 0 \\ 1 \end{pmatrix} = -\hbar \begin{pmatrix} 0 \\ 0 \\ 1 \end{pmatrix}$.

The particle is in the spin state $\begin{pmatrix} \frac{1}{2} i \\ \frac{1}{2} \\ \frac{1}{2}\sqrt{2} \end{pmatrix}$. Calculate $\langle S_x \rangle$, the expectation value of $S_x$.

*NOTE: Expressions for the operators $\hat{S}_+$, $\hat{S}_-$, and $\hat{S}_z$ in this basis are given under "Equations that may be helpful".*

## Physical Constants

speed of light ..... $c = 2.998 \times 10^{8}$ m/s

Planck's constant ..... $h = 6.626 \times 10^{-34}$ J·s

Planck's constant / $2\pi$.... $\hbar = 1.055 \times 10^{-34}$ J·s

elementary charge ..... $e = 1.602 \times 10^{-19}$ C

electric permittivity ..... $\varepsilon_0 = 8.854 \times 10^{-12}$ F/m

magnetic permeability ... $\mu_0 = 1.257 \times 10^{-6}$ H/m

electrostatic constant ... $k = (4\pi\varepsilon_0)^{-1} = 8.988 \times 10^{9}$ m/F

electron mass ..... $m_{\mathrm{el}} = 9.109 \times 10^{-31}$ kg

proton mass ..... $m_{\mathrm{p}} = 1.673 \times 10^{-27}$ kg

1 bohr..... $a_0 = 0.5292$ Å

1 hartree ..... $E_{\mathrm{h}} = 27.21$ eV

## EQUATIONS THAT MAY BE HELPFUL

### ELECTROSTATICS:

$$\oiint_{\mathrm{A}} \vec{\mathbf{E}} \cdot d\vec{\mathbf{A}} = \frac{q_{\mathrm{enc}}}{\varepsilon_0} \qquad \vec{\mathbf{E}} = -\vec{\nabla} V$$

$$-\int_{r_1}^{r_2} \vec{\mathbf{E}} \cdot d\vec{\ell} = V(r_2) - V(r_1) \qquad V(\vec{\mathbf{r}}) = \frac{1}{4\pi\varepsilon_0} \frac{q(\vec{\mathbf{r}}')}{\left|\vec{\mathbf{r}} - \vec{\mathbf{r}}'\right|}$$

work done $W = -\int_{\vec{\mathbf{a}}}^{\vec{\mathbf{b}}} q\vec{\mathbf{E}} \cdot d\vec{\ell} = q\left[V(\vec{\mathbf{b}}) - V(\vec{\mathbf{a}})\right]$

Multipole expansion:

$$V(\vec{\mathbf{r}}) = \frac{1}{4\pi\varepsilon_0}\left[\frac{1}{r}\int \rho(\vec{\mathbf{r}}')d\tau' + \frac{1}{r^2}\int r'\cos(\theta')\rho(\vec{\mathbf{r}}')d\tau' + \frac{1}{r^3}\int (r')^2 \left\{\tfrac{3}{2}\cos(\theta') - \tfrac{1}{2}\right\}\rho(\vec{\mathbf{r}}')d\tau' + \ldots\right]$$

where the first term is the monopole term, the second is the dipole term, the third is the quadrupole term … ; $\vec{\mathbf{r}}$ and $\vec{\mathbf{r}}'$ are field point and source point and $\theta'$ is the angle between them.

$$\vec{\mathbf{D}} = \varepsilon_0\vec{\mathbf{E}} + \vec{\mathbf{P}} \qquad \vec{\nabla} \cdot \vec{\mathbf{D}} = \rho_{\mathrm{f}} \qquad \rho_{\mathrm{b}} = -\vec{\nabla} \cdot \vec{\mathbf{P}} \qquad \sigma_{\mathrm{b}} = \hat{\mathbf{P}} \cdot \hat{\mathbf{n}}$$

The above are true for *all* dielectrics. Confining ourselves to LIH dielectrics, we also have:

$$\vec{\mathbf{D}} = \varepsilon\vec{\mathbf{E}} \qquad \vec{\mathbf{P}} = \chi_{\mathrm{e}}\varepsilon_0\vec{\mathbf{E}} \qquad \varepsilon = \varepsilon_0(1 + \chi_{\mathrm{e}}) \qquad \kappa_{\mathrm{e}} = \varepsilon / \varepsilon_0 \qquad \chi_{\mathrm{e}} = \kappa_{\mathrm{e}} - 1$$

$C(\text{dielectric}) = \kappa_{\mathrm{e}} C(\text{vacuum})$

Boundary conditions: $E_{2\mathrm{t}} - E_{1\mathrm{t}} = 0$ , $E_{2\mathrm{n}} - E_{1\mathrm{n}} = \dfrac{\sigma}{\varepsilon_0}$

**MAGNETOSTATICS:**

Lorentz Force: $\vec{\mathbf{F}} = q(\vec{\mathbf{v}} \times \vec{\mathbf{B}}) + q\vec{\mathbf{E}}$ Current densities: $I = \int \vec{\mathbf{J}} \cdot d\vec{\mathbf{A}}$, $I = \int \vec{\mathbf{K}} \cdot d\vec{\ell}$

Biot-Savart Law: $\vec{\mathbf{B}}(\vec{\mathbf{r}}) = \frac{\mu_0}{4\pi} \int \frac{I d\vec{\ell} \times \hat{\mathbf{R}}}{R^2}$ ($\vec{\mathbf{R}}$ is vector from source point to field point $\vec{\mathbf{r}}$).

For surface currents: $\vec{\mathbf{B}}(\vec{\mathbf{r}}) = \frac{\mu_0}{4\pi} \int \frac{\vec{\mathbf{K}} \times \hat{\mathbf{R}}}{R^2} da$.

For straight wire segment: $B = \frac{\mu_0 I}{4\pi s}\left[\sin\theta_2 - \sin\theta_1\right]$ where $s$ is perpendicular distance from wire.

For circular loop of radius $R$, the $B$-field at a point on the axis is $B = \frac{1}{2}\mu_0 I \frac{R^2}{(R^2 + z^2)^{3/2}}$.

Infinitely long solenoid: $B$-field inside is $B = \mu_0 n I$ ($n$ is number of turns per unit length).

Ampere's law: $\oint \vec{\mathbf{B}} \cdot d\vec{\ell} = \mu_0 I_{\text{enclosed}}$.

**Magnetic vector potential A**

$\vec{\mathbf{B}} = \vec{\nabla} \times \vec{\mathbf{A}}$

$\nabla^2 \vec{\mathbf{A}} = -\mu_0 \vec{\mathbf{J}} \quad \Rightarrow \quad \vec{\mathbf{A}} = \frac{\mu_0}{4\pi} \int \frac{\vec{\mathbf{J}}}{r - r'} d\tau'$

For line and surface currents $\vec{\mathbf{A}} = \frac{\mu_0}{4\pi} \int \frac{I}{r - r'} d\vec{\ell}$ $\quad \vec{\mathbf{A}} = \frac{\mu_0}{4\pi} \int \frac{\vec{\mathbf{K}}}{r - r'} da'$

From Stokes' theorem $\oint \vec{\mathbf{A}} \cdot d\vec{\ell} = \int \vec{\mathbf{B}} \cdot d\vec{\mathbf{a}}$

For a magnetic dipole $\vec{\mathbf{m}}$, $\vec{\mathbf{A}}_{\text{dipole}} = \frac{\mu_0}{4\pi} \frac{\vec{\mathbf{m}} \times \hat{\mathbf{r}}}{r^2}$

**Magnetic dipoles**

Magnetic dipole moment of a current distribution is given by $\vec{\mathbf{m}} = I \int d\vec{\mathbf{a}}$.

Force on magnetic dipole $\vec{\mathbf{F}} = \vec{\nabla}(\vec{\mathbf{m}} \cdot \vec{\mathbf{B}})$

Torque on magnetic dipole $\vec{\boldsymbol{\tau}} = \vec{\mathbf{m}} \times \vec{\mathbf{B}}$

$B$-field of magnetic dipole $\vec{\mathbf{B}}(\vec{\mathbf{r}}) = \frac{\mu_0}{4\pi} \frac{1}{r^3}\left[3(\vec{\mathbf{m}} \cdot \hat{\mathbf{r}})\hat{\mathbf{r}} - \vec{\mathbf{m}}\right]$

Dipole-dipole interaction energy is $U_{\text{DD}} = \frac{\mu_0}{4\pi R^3}\left[(\vec{\mathbf{m}}_1 \cdot \vec{\mathbf{m}}_2) - 3(\vec{\mathbf{m}}_1 \cdot \hat{\mathbf{R}})(\vec{\mathbf{m}}_2 \cdot \hat{\mathbf{R}})\right]$, where $\vec{\mathbf{R}} = \vec{\mathbf{r}}_1 - \vec{\mathbf{r}}_2$

**Material with magnetization M**

produces a magnetic field equivalent to that of (bound) volume and surface current densities $\vec{\mathbf{J}}_b = \vec{\nabla} \times \vec{\mathbf{M}}$ and $\vec{\mathbf{K}}_b = \vec{\mathbf{M}} \times \hat{\mathbf{n}}$.

$$\oint \vec{\mathbf{H}} \cdot d\vec{\ell} = I_{\text{free, enclosed}} \qquad \vec{\mathbf{H}} = \vec{\mathbf{B}} / \mu_0 - \vec{\mathbf{M}}$$

For linear magnetic material $\vec{\mathbf{M}} = \chi_{\text{m}} \vec{\mathbf{H}}$ and $\vec{\mathbf{B}} = \mu_0 (1 + \chi_{\text{m}}) \vec{\mathbf{H}}$ or $\vec{\mathbf{B}} = \mu \vec{\mathbf{H}}$

Boundary conditions: $B_{2\text{n}} - B_{1\text{n}} = 0 \qquad B_{2\|} - B_{1\|} = \mu_0 K$

**Maxwell's Equations in vacuum:**

1. $\vec{\nabla} \cdot \vec{\mathbf{E}} = \dfrac{\rho}{\varepsilon_0}$ Gauss' Law
2. $\vec{\nabla} \cdot \vec{\mathbf{B}} = 0$
3. $\vec{\nabla} \times \vec{\mathbf{E}} = -\dfrac{\partial \vec{\mathbf{B}}}{\partial t}$ Faraday's Law
4. $\vec{\nabla} \times \vec{\mathbf{B}} = \mu_0 \vec{\mathbf{J}} + \varepsilon_0 \mu_0 \dfrac{\partial \vec{\mathbf{E}}}{\partial t}$ Ampere's Law with Maxwell's correction

**Maxwell's Equations in LIH media:**

1. $\vec{\nabla} \cdot \vec{\mathbf{E}} = \dfrac{\rho_{\text{f}}}{\varepsilon}$ Gauss' Law
2. $\vec{\nabla} \cdot \vec{\mathbf{B}} = 0$
3. $\vec{\nabla} \times \vec{\mathbf{E}} = -\dfrac{\partial \vec{\mathbf{B}}}{\partial t}$ Faraday's Law
4. $\vec{\nabla} \times \vec{\mathbf{B}} = \mu \vec{\mathbf{J}}_{\text{f}} + \varepsilon \mu \dfrac{\partial \vec{\mathbf{E}}}{\partial t}$ Ampere's Law with Maxwell's correction

Alternative way of writing Faraday's Law: $\oint \vec{\mathbf{E}} \cdot d\vec{\ell} = -\dfrac{d\Phi}{dt}$

Mutual and self inductance: $\Phi_2 = M_{21} I_1$, and $M_{21} = M_{12}$; $\qquad \Phi = LI$

Energy stored in electric, magnetic field:

$$W = \tfrac{1}{2} \varepsilon_0 \int_V E^2 d\tau = Q^2 / 2C$$

$$W = \tfrac{1}{2} \mu_0^{-1} \int_V B^2 d\tau = \tfrac{1}{2} L I^2 = \tfrac{1}{2} \oint \vec{\mathbf{A}} \cdot \vec{\mathbf{I}} \, d\ell$$

## VECTOR DERIVATIVES

**Cartesian.** $d\mathbf{l} = dx\,\hat{\mathbf{x}} + dy\,\hat{\mathbf{y}} + dz\,\hat{\mathbf{z}}; \quad d\tau = dx\,dy\,dz$

*Gradient* : $$\nabla t = \frac{\partial t}{\partial x}\hat{\mathbf{x}} + \frac{\partial t}{\partial y}\hat{\mathbf{y}} + \frac{\partial t}{\partial z}\hat{\mathbf{z}}$$

*Divergence* : $$\nabla \cdot \mathbf{v} = \frac{\partial v_x}{\partial x} + \frac{\partial v_y}{\partial y} + \frac{\partial v_z}{\partial z}$$

*Curl* : $$\nabla \times \mathbf{v} = \left(\frac{\partial v_z}{\partial y} - \frac{\partial v_y}{\partial z}\right)\hat{\mathbf{x}} + \left(\frac{\partial v_x}{\partial z} - \frac{\partial v_z}{\partial x}\right)\hat{\mathbf{y}} + \left(\frac{\partial v_y}{\partial x} - \frac{\partial v_x}{\partial y}\right)\hat{\mathbf{z}}$$

*Laplacian* : $$\nabla^2 t = \frac{\partial^2 t}{\partial x^2} + \frac{\partial^2 t}{\partial y^2} + \frac{\partial^2 t}{\partial z^2}$$

**Spherical.** $d\mathbf{l} = dr\,\hat{\mathbf{r}} + r\,d\theta\,\hat{\boldsymbol{\theta}} + r\sin\theta\,d\phi\,\hat{\boldsymbol{\phi}}; \quad d\tau = r^2\sin\theta\,dr\,d\theta\,d\phi$

*Gradient* : $$\nabla t = \frac{\partial t}{\partial r}\hat{\mathbf{r}} + \frac{1}{r}\frac{\partial t}{\partial \theta}\hat{\boldsymbol{\theta}} + \frac{1}{r\sin\theta}\frac{\partial t}{\partial \phi}\hat{\boldsymbol{\phi}}$$

*Divergence* : $$\nabla \cdot \mathbf{v} = \frac{1}{r^2}\frac{\partial}{\partial r}(r^2 v_r) + \frac{1}{r\sin\theta}\frac{\partial}{\partial \theta}(\sin\theta\, v_\theta) + \frac{1}{r\sin\theta}\frac{\partial v_\phi}{\partial \phi}$$

*Curl* : $$\nabla \times \mathbf{v} = \frac{1}{r\sin\theta}\left[\frac{\partial}{\partial \theta}(\sin\theta\, v_\phi) - \frac{\partial v_\theta}{\partial \phi}\right]\hat{\mathbf{r}} + \frac{1}{r}\left[\frac{1}{\sin\theta}\frac{\partial v_r}{\partial \phi} - \frac{\partial}{\partial r}(r v_\phi)\right]\hat{\boldsymbol{\theta}} + \frac{1}{r}\left[\frac{\partial}{\partial r}(r v_\theta) - \frac{\partial v_r}{\partial \theta}\right]\hat{\boldsymbol{\phi}}$$

*Laplacian* : $$\nabla^2 t = \frac{1}{r^2}\frac{\partial}{\partial r}\left(r^2\frac{\partial t}{\partial r}\right) + \frac{1}{r^2\sin\theta}\frac{\partial}{\partial \theta}\left(\sin\theta\frac{\partial t}{\partial \theta}\right) + \frac{1}{r^2\sin^2\theta}\frac{\partial^2 t}{\partial \phi^2}$$

**Cylindrical.** $d\mathbf{l} = ds\,\hat{\mathbf{s}} + s\,d\phi\,\hat{\boldsymbol{\phi}} + dz\,\hat{\mathbf{z}}; \quad d\tau = s\,ds\,d\phi\,dz$

*Gradient* : $$\nabla t = \frac{\partial t}{\partial s}\hat{\mathbf{s}} + \frac{1}{s}\frac{\partial t}{\partial \phi}\hat{\boldsymbol{\phi}} + \frac{\partial t}{\partial z}\hat{\mathbf{z}}$$

*Divergence* : $$\nabla \cdot \mathbf{v} = \frac{1}{s}\frac{\partial}{\partial s}(s v_s) + \frac{1}{s}\frac{\partial v_\phi}{\partial \phi} + \frac{\partial v_z}{\partial z}$$

*Curl* : $$\nabla \times \mathbf{v} = \left[\frac{1}{s}\frac{\partial v_z}{\partial \phi} - \frac{\partial v_\phi}{\partial z}\right]\hat{\mathbf{s}} + \left[\frac{\partial v_s}{\partial z} - \frac{\partial v_z}{\partial s}\right]\hat{\boldsymbol{\phi}} + \frac{1}{s}\left[\frac{\partial}{\partial s}(s v_\phi) - \frac{\partial v_s}{\partial \phi}\right]\hat{\mathbf{z}}$$

*Laplacian* : $$\nabla^2 t = \frac{1}{s}\frac{\partial}{\partial s}\left(s\frac{\partial t}{\partial s}\right) + \frac{1}{s^2}\frac{\partial^2 t}{\partial \phi^2} + \frac{\partial^2 t}{\partial z^2}$$

## VECTOR IDENTITIES

**Triple Products**

(1) $\mathbf{A}\cdot(\mathbf{B}\times\mathbf{C}) = \mathbf{B}\cdot(\mathbf{C}\times\mathbf{A}) = \mathbf{C}\cdot(\mathbf{A}\times\mathbf{B})$

(2) $\mathbf{A}\times(\mathbf{B}\times\mathbf{C}) = \mathbf{B}(\mathbf{A}\cdot\mathbf{C}) - \mathbf{C}(\mathbf{A}\cdot\mathbf{B})$

**Product Rules**

(3) $\nabla(fg) = f(\nabla g) + g(\nabla f)$

(4) $\nabla(\mathbf{A}\cdot\mathbf{B}) = \mathbf{A}\times(\nabla\times\mathbf{B}) + \mathbf{B}\times(\nabla\times\mathbf{A}) + (\mathbf{A}\cdot\nabla)\mathbf{B} + (\mathbf{B}\cdot\nabla)\mathbf{A}$

(5) $\nabla\cdot(f\mathbf{A}) = f(\nabla\cdot\mathbf{A}) + \mathbf{A}\cdot(\nabla f)$

(6) $\nabla\cdot(\mathbf{A}\times\mathbf{B}) = \mathbf{B}\cdot(\nabla\times\mathbf{A}) - \mathbf{A}\cdot(\nabla\times\mathbf{B})$

(7) $\nabla\times(f\mathbf{A}) = f(\nabla\times\mathbf{A}) - \mathbf{A}\times(\nabla f)$

(8) $\nabla\times(\mathbf{A}\times\mathbf{B}) = (\mathbf{B}\cdot\nabla)\mathbf{A} - (\mathbf{A}\cdot\nabla)\mathbf{B} + \mathbf{A}(\nabla\cdot\mathbf{B}) - \mathbf{B}(\nabla\cdot\mathbf{A})$

**Second Derivatives**

(9) $\nabla\cdot(\nabla\times\mathbf{A}) = 0$

(10) $\nabla\times(\nabla f) = 0$

(11) $\nabla\times(\nabla\times\mathbf{A}) = \nabla(\nabla\cdot\mathbf{A}) - \nabla^2\mathbf{A}$

## FUNDAMENTAL THEOREMS

**Gradient Theorem** : $\int_{\mathbf{a}}^{\mathbf{b}}(\nabla f)\cdot d\mathbf{l} = f(\mathbf{b}) - f(\mathbf{a})$

**Divergence Theorem** : $\int(\nabla\cdot\mathbf{A})\,d\tau = \oint \mathbf{A}\cdot d\mathbf{a}$

**Curl Theorem** : $\int(\nabla\times\mathbf{A})\cdot d\mathbf{a} = \oint \mathbf{A}\cdot d\mathbf{l}$

**Spin operators for a spin-1 particle:**

Using the three eigenkets of $\hat{S}_z$ as the basis for the particle's spin state in the following notation: $S_z\begin{pmatrix}1\\0\\0\end{pmatrix}=\hbar\begin{pmatrix}1\\0\\0\end{pmatrix}$, $S_z\begin{pmatrix}0\\1\\0\end{pmatrix}=0\begin{pmatrix}0\\1\\0\end{pmatrix}$, $S_z\begin{pmatrix}0\\0\\1\end{pmatrix}=-\hbar\begin{pmatrix}0\\0\\1\end{pmatrix}$, the spin operators $\hat{S}_+$, $\hat{S}_-$, and $\hat{S}_z$ are given by

$$\hat{S}_+=\hbar\sqrt{2}\begin{pmatrix}0&1&0\\0&0&1\\0&0&0\end{pmatrix}\ ,\qquad \hat{S}_-=\hbar\sqrt{2}\begin{pmatrix}0&0&0\\1&0&0\\0&1&0\end{pmatrix}\ ,\qquad \hat{S}_z=\hbar\begin{pmatrix}1&0&0\\0&0&0\\0&0&-1\end{pmatrix}$$

---

- *Schrödinger Equation.* General and time-independent:

$$\begin{aligned} i\hbar\frac{\partial\Psi}{\partial t} &= \left(-\frac{\hbar^2}{2m}\nabla^2+V\right)\Psi \\ H\psi &= E\psi \\ \Psi &= \psi e^{-iEt/\hbar} \end{aligned} \tag{1}$$

- *Formalism and Operator Algebra.* This is probably actually the easiest topic for people who have taken 143a. Some equations of use are:

$$\begin{aligned} \langle\alpha|\beta\rangle &= \langle\beta|\alpha\rangle^* \\ \hat{O} &= \hat{O}^\dagger \text{ if } \hat{O} \text{ is Hermitian} \\ \langle\alpha|\hat{O}|\beta\rangle &= \beta\langle\alpha|\beta\rangle \text{ if } |\beta\rangle \text{ is an eigenstate of } \hat{O} \\ &= \int_{-\infty}^{\infty}\mathrm{d}x\,\alpha^*(x)\hat{O}(x)\beta(x) \text{ in 1D} \\ &= A^\dagger\times O\times B \text{ as matrices} \\ [\hat{A},\hat{B}] &= \hat{A}\hat{B}-\hat{B}\hat{A} \\ \therefore\ [\hat{A},\hat{B}] &= -[\hat{B},\hat{A}] \\ [\hat{A}\hat{B},\hat{C}] &= [\hat{A},\hat{C}]\hat{B}+\hat{A}[\hat{B},\hat{C}] \end{aligned} \tag{2}$$

A Hermitian matrix has real eigenvalues; observables thus must be represented by Hermitian operators.

- *Position and momentum.*

$$\begin{aligned} \hat{p} &= -i\hbar\nabla \\ [\hat{x},\hat{p}] &= i\hbar \\ [\hat{f}(x),\hat{p}] &= i\hbar\frac{\mathrm{d}f}{\mathrm{d}x} \end{aligned} \tag{3}$$

$$\int (a\,x^2+b)^{3/2}\,dx =$$

$$\frac{1}{8}\left(\frac{3\,b^2\log\left(\sqrt{a}\,\sqrt{a\,x^2+b}+a\,x\right)}{\sqrt{a}}+x\sqrt{a\,x^2+b}\,\left(2\,a\,x^2+5\,b\right)\right)$$

$$\int \sqrt{a\,x^2+b}\,dx = \frac{1}{2}\left(x\sqrt{a\,x^2+b}+\frac{b\log\left(\sqrt{a}\,\sqrt{a\,x^2+b}+a\,x\right)}{\sqrt{a}}\right)$$

$$\int \frac{1}{\sqrt{a\,x^2+b}}\,dx = \frac{\log\left(\sqrt{a}\,\sqrt{a\,x^2+b}+a\,x\right)}{\sqrt{a}}$$

$$\int \frac{1}{(a\,x^2+b)^{3/2}}\,dx = \frac{x}{b\sqrt{a\,x^2+b}}$$

$$\int \frac{1}{(a\,x^2+b)^{5/2}}\,dx = \frac{x\left(2\,a\,x^2+3\,b\right)}{3\,b^2\,(a\,x^2+b)^{3/2}}$$